3/2-way Solenoid Valve J

For controlling pneumatic knockers

MV314-0J, MV314-3J, MV312-0J, MV312-3J

100-066 EN

Date: 12.05.2025

Including actuating magnet and connector

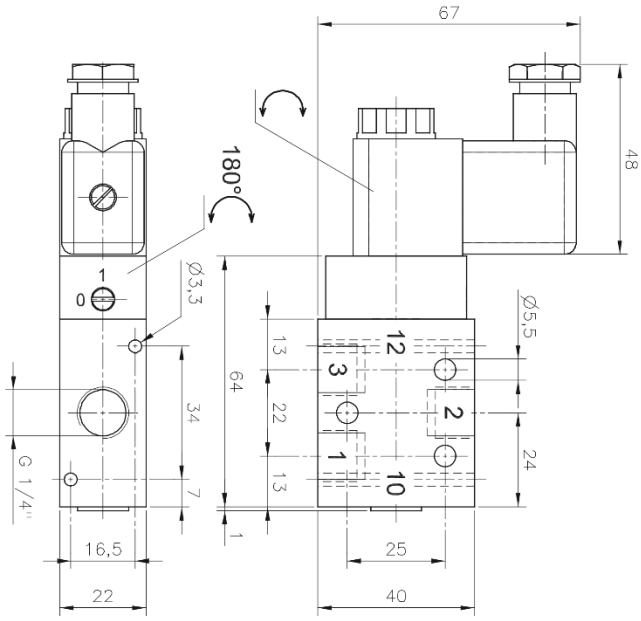

Dimensional drawing **MV314J (G1/4")**
(for pneumatic knockers **K 40, K 63, K 80, K100** and pneumatic distance knockers **QJ 63, QJ 80, QJ100**)

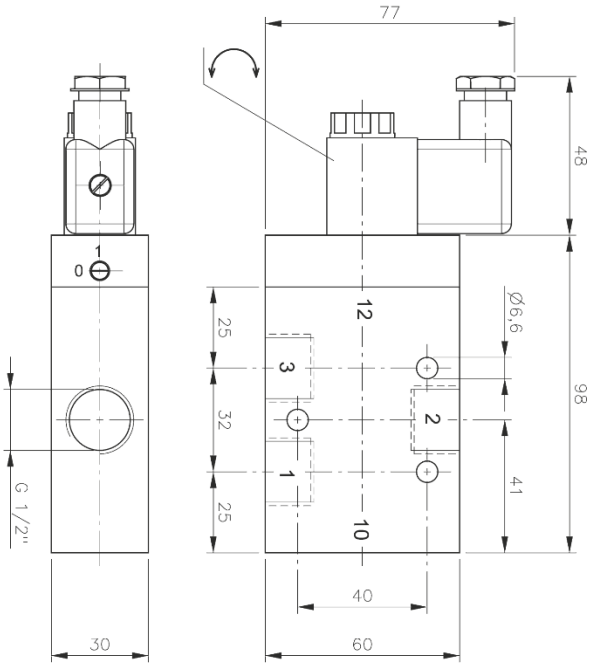

Dimensional drawing **MV312J (G1/2")**
(for pneumatic knockers **K125, K160** and pneumatic distance knockers **QJ125**)

Symbol:

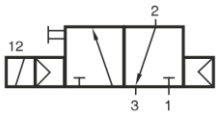

Circuit diagram:

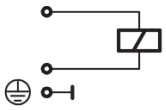

Design type	3/2-way solenoid valve with pneumatic spring return			
singold item-No.	**MV314-0J**	**MV314-3J**	**MV312-0J**	**MV312-3J**
Voltage	230V AC, 50Hz	24V DC	230V AC, 50Hz	24V DC
Power consumption	5 VA	3 W	5 VA	3 W
Protection class	IP65 (with connector)			
Connector	Cable plug form B, 22 mm, M16x1,5			
Manual Override	Bistable manual override for turning			
Medium	Purified, lubricated or unlubricated compressed air Air quality according to ISO 8573-1:2010: 7 - 4 - 4 for particles - water - oil.			
Media / Ambient temperature	-10°C .... +50°C	-10°C .... +60°C	-10°C .... +50°C	-10°C .... +60°C
Port size	To avoid freezing of the components, the compressed air must be free of moisture below + 2 °C (+35°F)			
Nominal size	G ¼"		G ½"	
Function	Normally Closed (n.c.)			
Operating pressure	Min. 2 bar - max. 10 bar		Min. 1 bar - max. 10 bar	
Flow	1250 l/min		3000 l/min	
Weight	0,21 kg		0,53 kg	
Materials	Housing: Aluminium 6082 anodised 5-8µm, Sealing system: Brass, NBR			
Actuation	Solenoid			
Return	Pneumatic spring return			
Flow direction	For full switching of the sliders 50msec			

singold gerätetechnik gmbh, 86830 Schwabmünchen, Germany

Tel.: +49 (0) 8232 / 50 386-0
E-Mail: info@singold-tech.de
Website: www.singold.tech